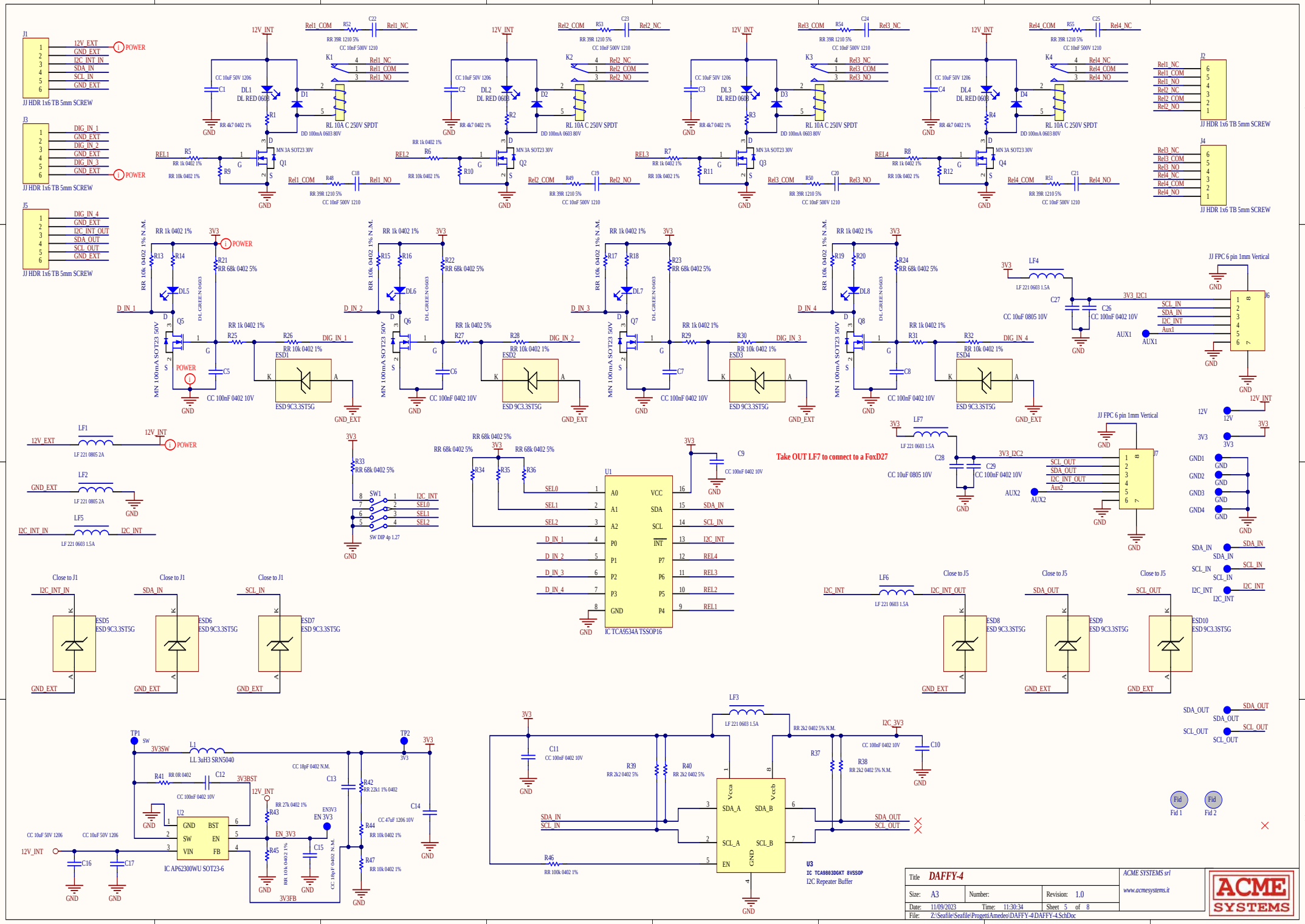
J1
12V_EXT
GND_EXT
I2C_INT_IN
SDA_IN
SCL_IN
GND_EXT
JJ HDR 1x6 TB 5mm SCREW
J3
DIG_IN_1
GND_EXT
DIG_IN_2
GND_EXT
DIG_IN_3
GND_EXT
JJ HDR 1x6 TB 5mm SCREW
J5
DIG_IN_4
GND_EXT
I2C_INT_OUT
SDA_OUT
SCL_OUT
GND_EXT
JJ HDR 1x6 TB 5mm SCREW
POWER
12V_INT
3V3
GND
GND_EXT
Rel1_COM
Rel1_NC
Rel1_NO
Rel2_COM
Rel2_NC
Rel2_NO
Rel3_COM
Rel3_NC
Rel3_NO
Rel4_COM
Rel4_NC
Rel4_NO
K1
K2
K3
K4
RL 10A C 250V SPDT
DD 100mA 0603 80V
DL1 DL RED 0603
DL2 DL RED 0603
DL3 DL RED 0603
DL4 DL RED 0603
MN 3A SOT23 30V
REL1
REL2
REL3
REL4
J2
J4
JJ HDR 1x6 TB 5mm SCREW
DL5
DL6
DL7
DL8
DL GREEN 0603
MN 100mA SOT23 50V
ESD1
ESD2
ESD3
ESD4
ESD 9C3.3ST5G
DIG_IN_1
DIG_IN_2
DIG_IN_3
DIG_IN_4
LF1
LF2
LF3
LF4
LF5
LF6
LF7
LF 221 0805 2A
LF 221 0603 1.5A
I2C_INT
I2C_INT_OUT
I2C_3V3
3V3_I2C1
3V3_I2C2
AUX1
AUX2
JJ FPC 6 pin 1mm Vertical
J6
J7
Take OUT LF7 to connect to a FoxD27
SW1
SW DIP 4p 1.27
U1
IC TCA9534A TSSOP16
SEL0
SEL1
SEL2
SDA_IN
SCL_IN
SDA_OUT
SCL_OUT
Close to J1
Close to J5
ESD5
ESD6
ESD7
ESD8
ESD9
ESD10
TP1
TP2
SW
3V3SW
L1
LL 3uH3 SRN5040
3V3BST
12V_INT
U2
IC AP62300WU SOT23-6
EN_3V3
EN 3V3
3V3FB
U3
IC TCA0803DGKT 8VSSOP
I2C Repeater Buffer
Fid 1
Fid 2
Title DAFFY-4
Size: A3
Number:
Revision: 1.0
Date: 11/09/2023
Time: 11:30:34
Sheet 5 of 8
File: Z:\Seafile\Seafile\Progetti\Amedeo\DAFFY-4\DAFFY-4.SchDoc
ACME SYSTEMS srl
www.acmesystems.it
ACME SYSTEMS