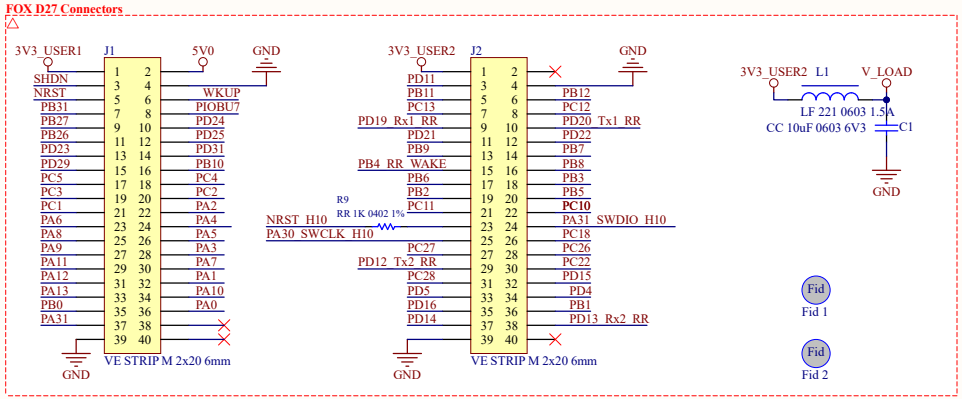


```
Serial Data Port Connections
   RR                    H10
PD19  URXD2              PB2
PD20  UTXD2              PB3

         Serial Debug Port Connections
   RR                    H10
PD13  FC_4_1 Rx          PA22
PD12  FC_4_0 Tx          PA23

         Programming Port
   RR                    H10
PC21  GPIO               NRST_H10
PC19  GPIO               PA30_SWCLK_H10
PC20  GPIO               PA31_SWDIO_H10
```

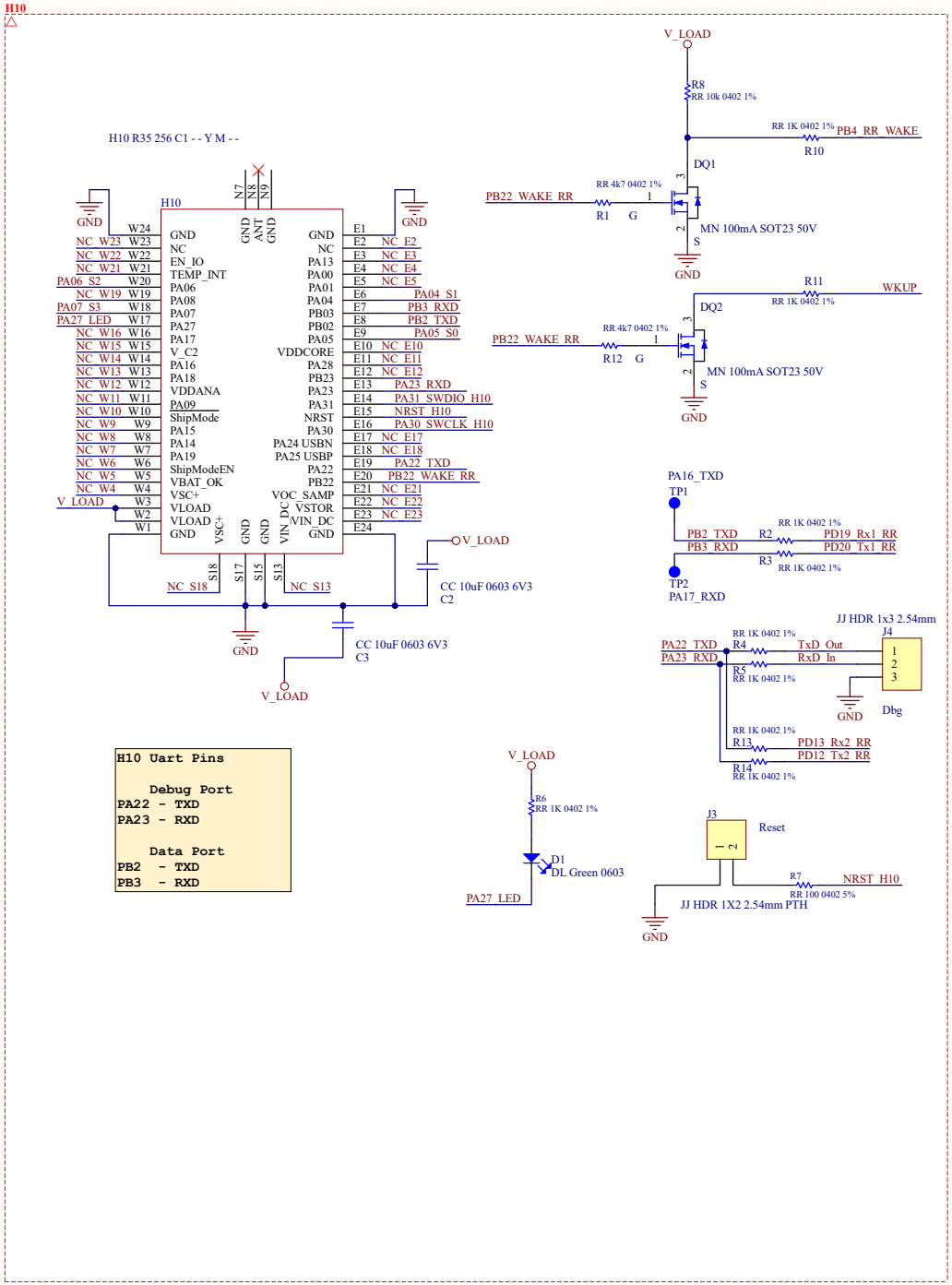


```
H10 Uart Pins

    Debug Port
PA22 - TXD
PA23 - RXD

    Data Port
PB2  - TXD
PB3  - RXD
```

Title **Brizio H10**			*ACME Systems srl*
Size: A4	Number:*	Revision:3	*Sergio Tanzilli*
Date: 2023-11-28	Time: 14:19:44	Sheet 1 of 1	*Roberto Asquini*
File: C:\Users\fabri\Seafile\Frabs\BrizioH10\BrizioH10_3\BrizioH10_3.SchDoc			*Fabrizio Rinalduzzi*
			www.acmesystems.it

ACME SYSTEMS